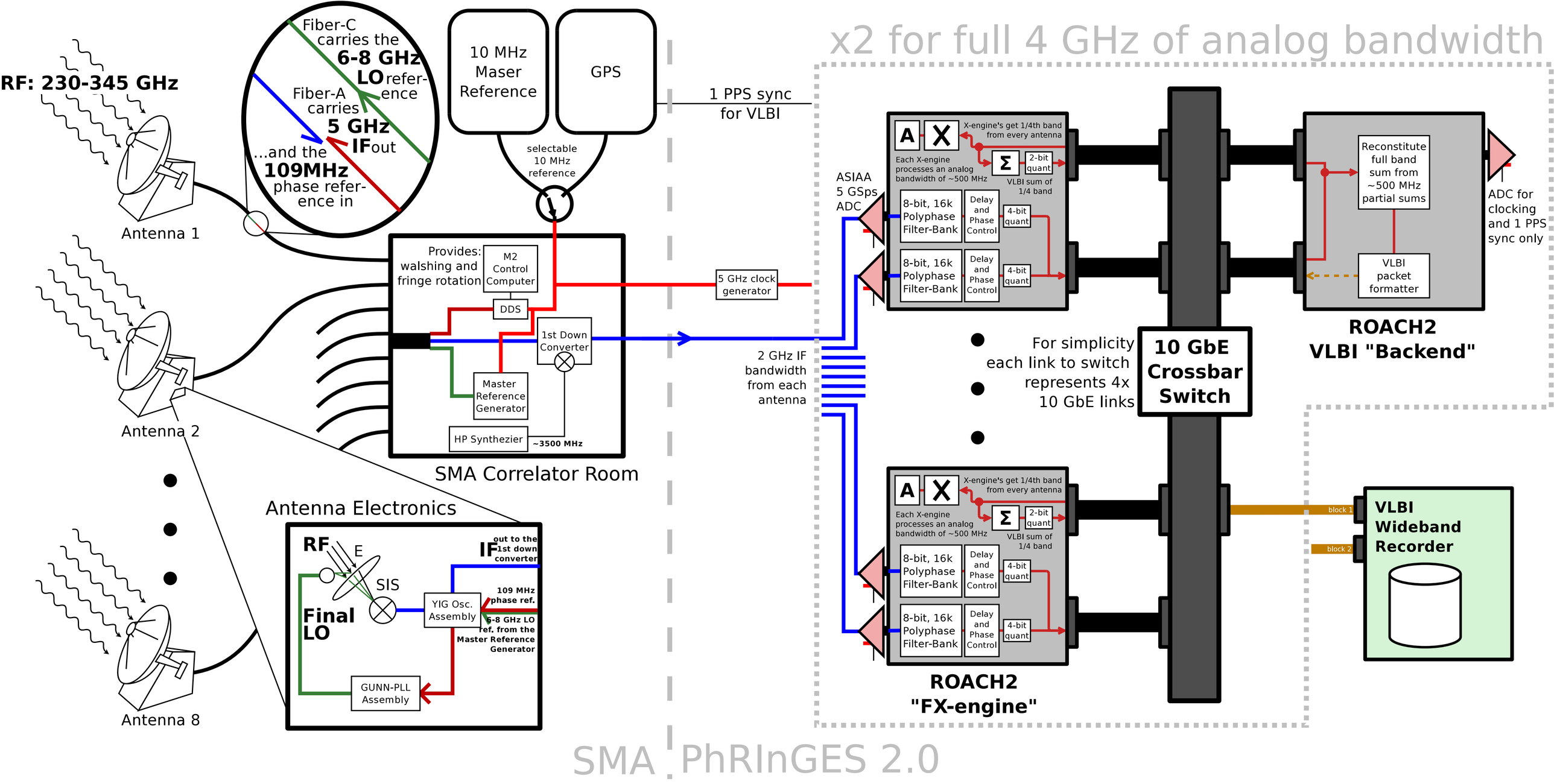
x2 for full 4 GHz of analog bandwidth
RF: 230-345 GHz
Fiber-C carries the 6-8 GHz LO reference
Fiber-A carries 5 GHz IFout
...and the 109MHz phase reference in
10 MHz Maser Reference
GPS
1 PPS sync for VLBI
selectable 10 MHz reference
Antenna 1
Antenna 2
Antenna 8
Provides: walshing and fringe rotation
M2 Control Computer
DDS
1st Down Converter
Master Reference Generator
HP Synthezier
~3500 MHz
SMA Correlator Room
5 GHz clock generator
2 GHz IF bandwidth from each antenna
Antenna Electronics
RF
E
SIS
Final LO
IF
out to the 1st down converter
YIG Osc. Assembly
109 MHz phase ref.
6-8 GHz LO ref. from the Master Reference Generator
GUNN-PLL Assembly
ASIAA 5 GSps ADC
A
X
X-engine's get 1/4th band from every antenna
Each X-engine processes an analog bandwidth of ~500 MHz
Σ
2-bit quant
VLBI sum of 1/4 band
8-bit, 16k Polyphase Filter-Bank
Delay and Phase Control
4-bit quant
For simplicity each link to switch represents 4x 10 GbE links
10 GbE Crossbar Switch
Reconstitute full band sum from ~500 MHz partial sums
VLBI packet formatter
ADC for clocking and 1 PPS sync only
ROACH2 VLBI "Backend"
ROACH2 "FX-engine"
block 1
block 2
VLBI Wideband Recorder
SMA PhRInGES 2.0