Decay Characteristics of the Scissors Mode of 0νββ-Decay Partner Isotopes*

Conference on Neutrino and Nuclear Physics (CNNP2020)

J. Kleemann[1,✉], T. Beck[1], U. Friman-Gayer[1,2], N. Pietralla[1], V. Werner[1], S. Finch[2], J. Kotila[3], Krishichayan[2], B. Löher[1], H. Pai[1,4], O. Papst[1], W. Tornow[2], M. Weinert[5]

[1]IKP, TU Darmstadt, Germany
[2]TUNL, Duke University, Durham, NC, USA
[3]University of Jyväskylä, Finland
[4]SINP, Kolkata, India
[5]IKP, Universität zu Köln, Germany

✉E-Mail: jkleemann@ikp.tu-darmstadt.de

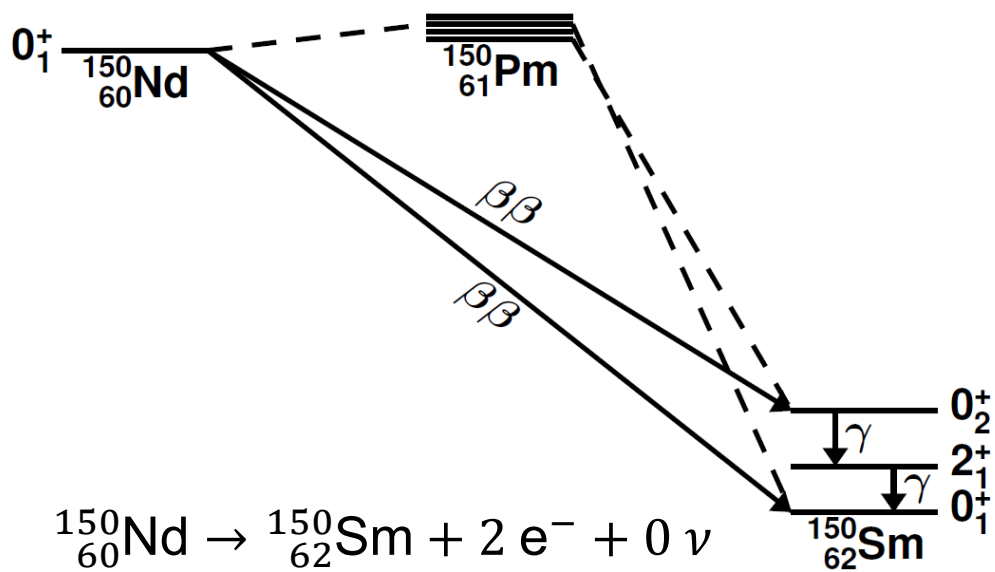

$$^{150}_{60}\mathrm{Nd} \rightarrow {}^{150}_{62}\mathrm{Sm} + 2\,\mathrm{e}^- + 0\,\nu$$

*Supported by DFG research grant CRC 1245 and by the State of Hesse under the grant “Nuclear Photonics” within the LOEWE program

Potential 0νββ-decay ^{150}Nd → ^{150}Sm

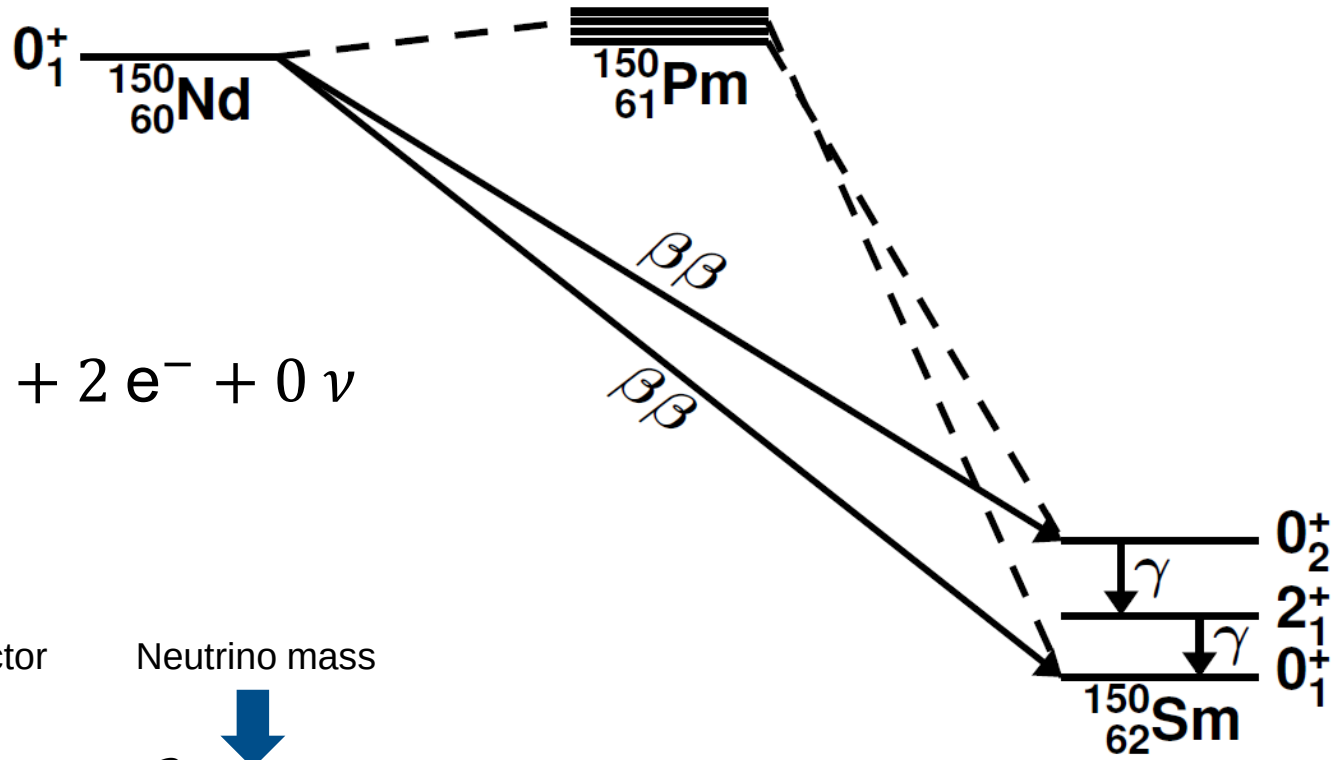

$$^{150}_{60}\mathrm{Nd} \rightarrow {}^{150}_{62}\mathrm{Sm} + 2\,\mathrm{e}^- + 0\,\nu$$

Kinematical factor

Neutrino mass

$$\lambda_{0\nu\beta\beta} = G_{0\nu}\left|M^{(0\nu)}\right|^2\langle m_\nu\rangle^2$$

Experimental constraints: Scissors Mode data

0νββ-decay rate

Nuclear matrix element (NME)

Nuclear structure theory (IBM-2, …)

Potential 0νββ-decay ^{150}Nd → ^{150}Sm

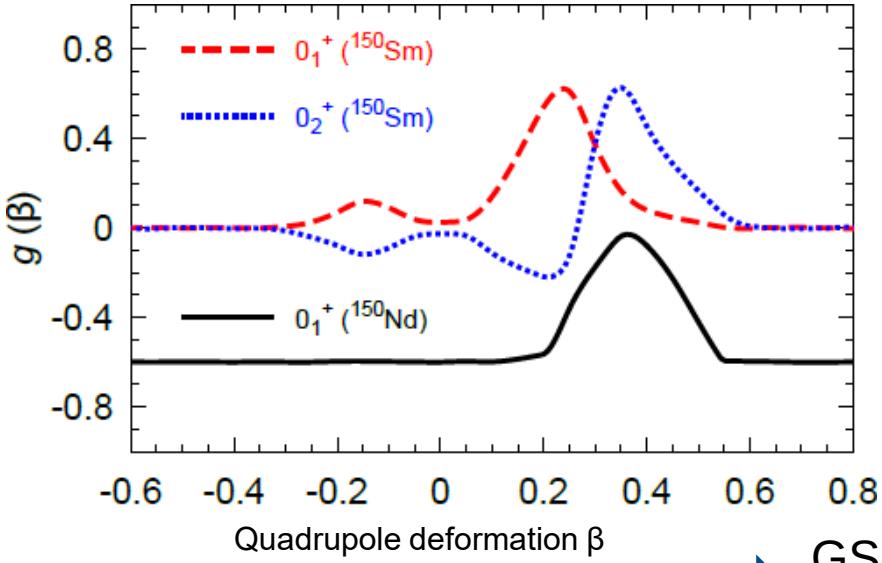

T. R. Rodríguez, private communication (2016)

EDF: $\frac{\lambda_{0\nu\beta\beta}[0_2^+]}{\lambda_{0\nu\beta\beta}[0_1^+]} = 1.2$

J. Beller *et al.*, Phys. Rev. Lett. **111**, 172501 (2013)

➡ GS-shape of ^{150}Sm ≠ GS-shape of ^{150}Nd
0_2^+-shape of ^{150}Sm ≈ GS-shape of ^{150}Nd

➡ Enhanced 0νββ to 0_2^+ of ^{150}Sm

➡ γγ-coincidence to 0νββ

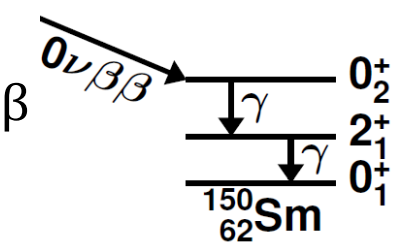

Scissors mode

- Energetically low lying, collective nuclear excitation
- Geometric picture: Scissors-like, isovector oscillation of protons against neutrons
- 1^+ states

  N. Lo Iudice and F. Palumbo, Phys. Rev. Lett. **41**, 1532 (1978)
- Rare earth region: Typically at approximately 3 MeV

  F. Iachello, Nucl. Phys. A **358**, 89 (1981)

  D. Bohle, A. Richter *et al.*, Phys. Lett. B **137**, 27 (1984)

  N. Pietralla *et al.*, Phys. Rev. C **58**, 184 (1998)

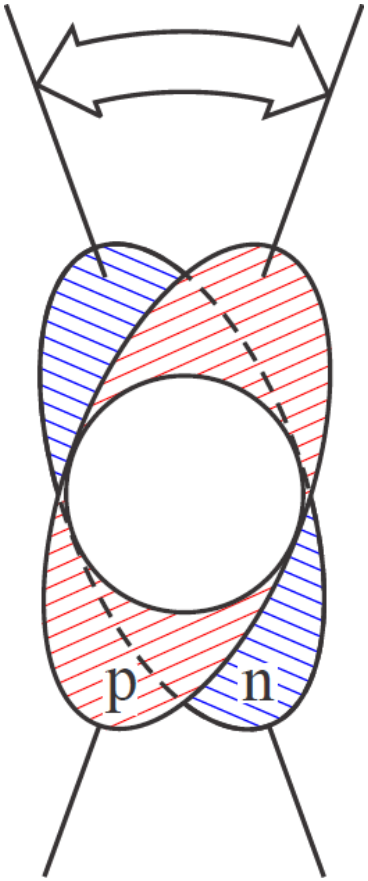

K. Heyde *et al.*,
Rev. Mod. Phys. **82**, 2365 (2010)

Scissors mode

- In IBM-2: Mixed-symmetry state
  → Sensitive to neutron-proton degree of freedom
  → Constraints on parameters of Majorana interaction in IBM-2
- Decay behavior sensitive to deformation

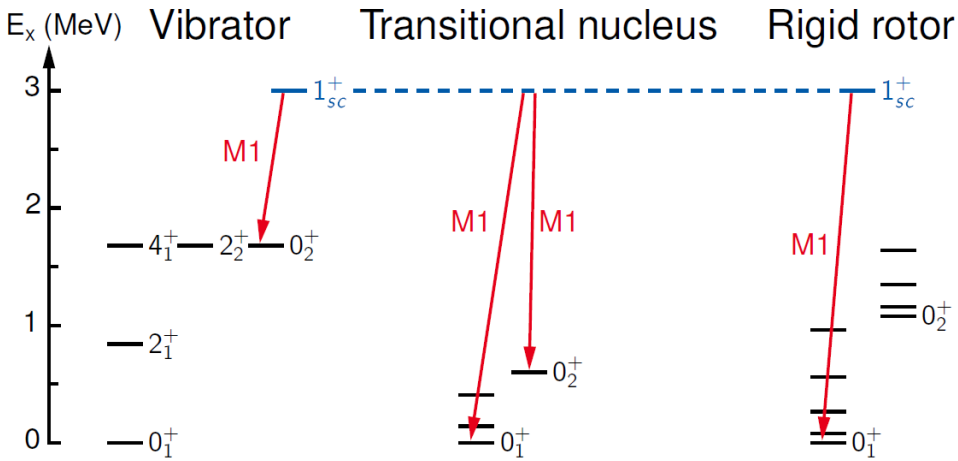

J. Beller, doctoral thesis, TU Darmstadt (2014)

Experimental technique: NRF at HIγS

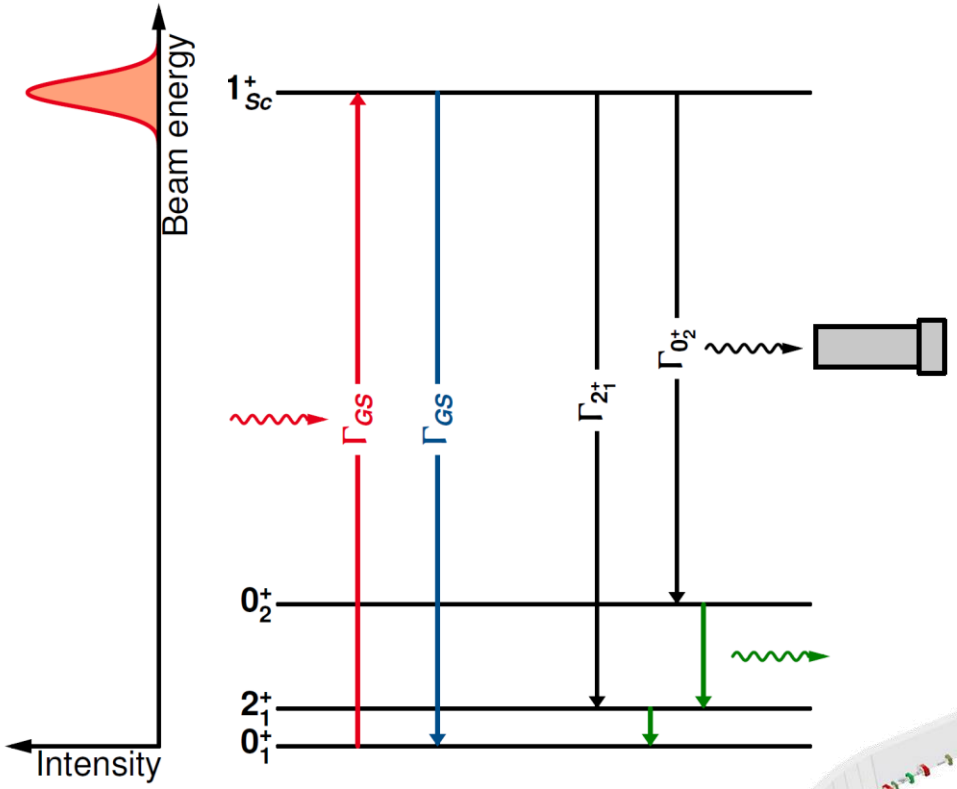

Model-independent

$$J^\pi, \frac{\Gamma_k}{\Gamma_{GS}}, B(\sigma L), \ldots$$

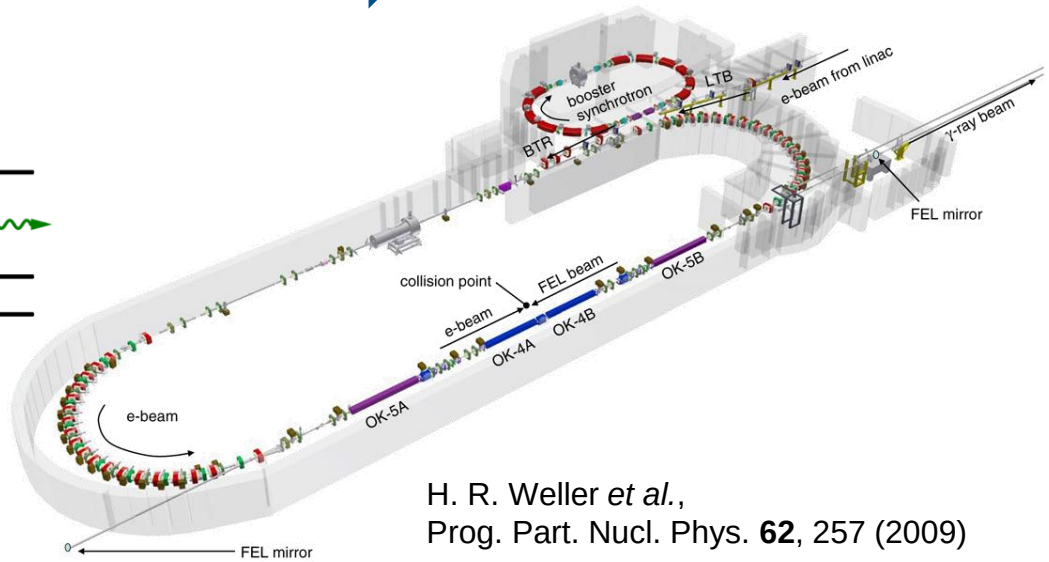

H. R. Weller *et al.*,
Prog. Part. Nucl. Phys. **62**, 257 (2009)

Angular distribution of $0^+ \rightarrow 1^\pi \rightarrow 0^+$ cascades

TECHNISCHE UNIVERSITÄT DARMSTADT

Using HIγS' polarized γ-beam: Determination of parities by angular distribution of ground-state transitions

N. Pietralla *et al.*, Phys. Rev. Lett. **88**, 012502 (2001)

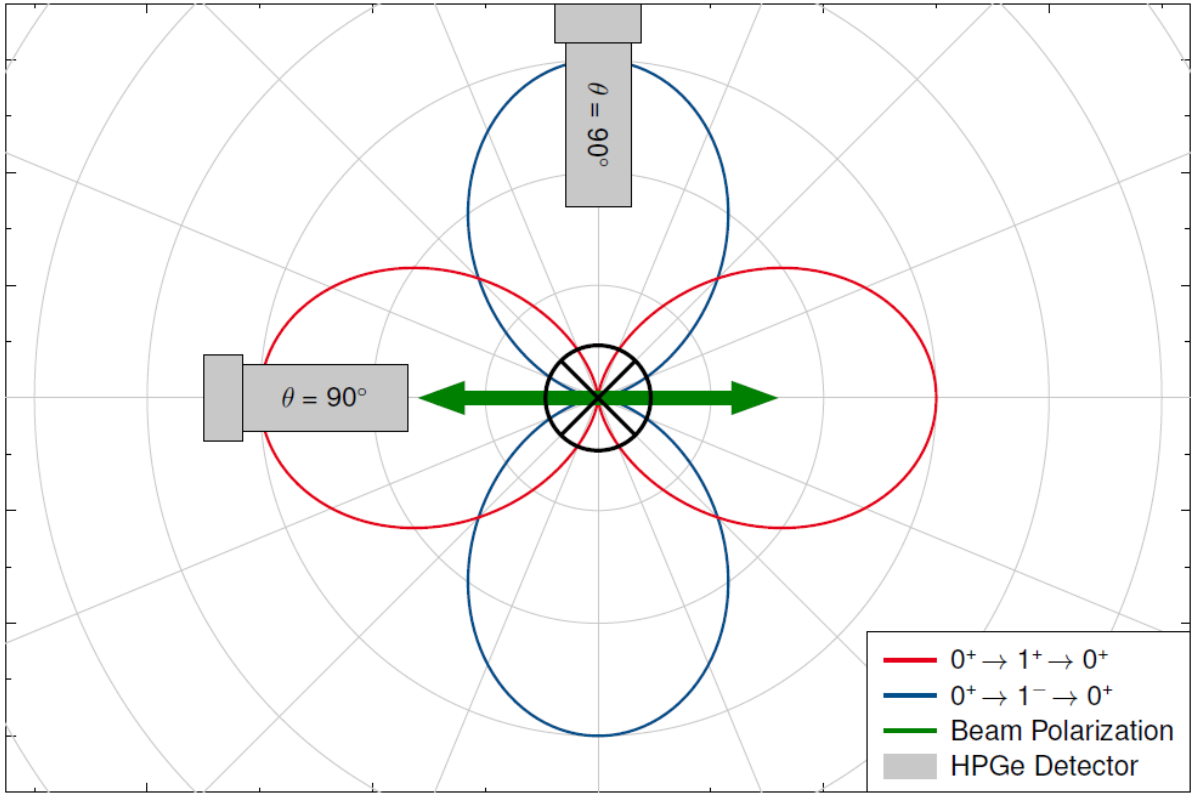

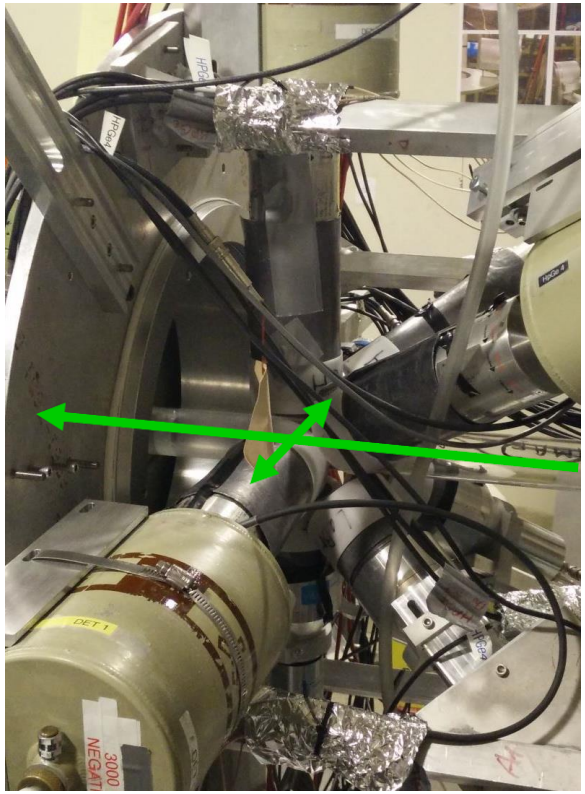

Nuclear Photonics

SFB 1245

Extract of the ^{150}Nd spectra within the 2994 keV-beam's energy range

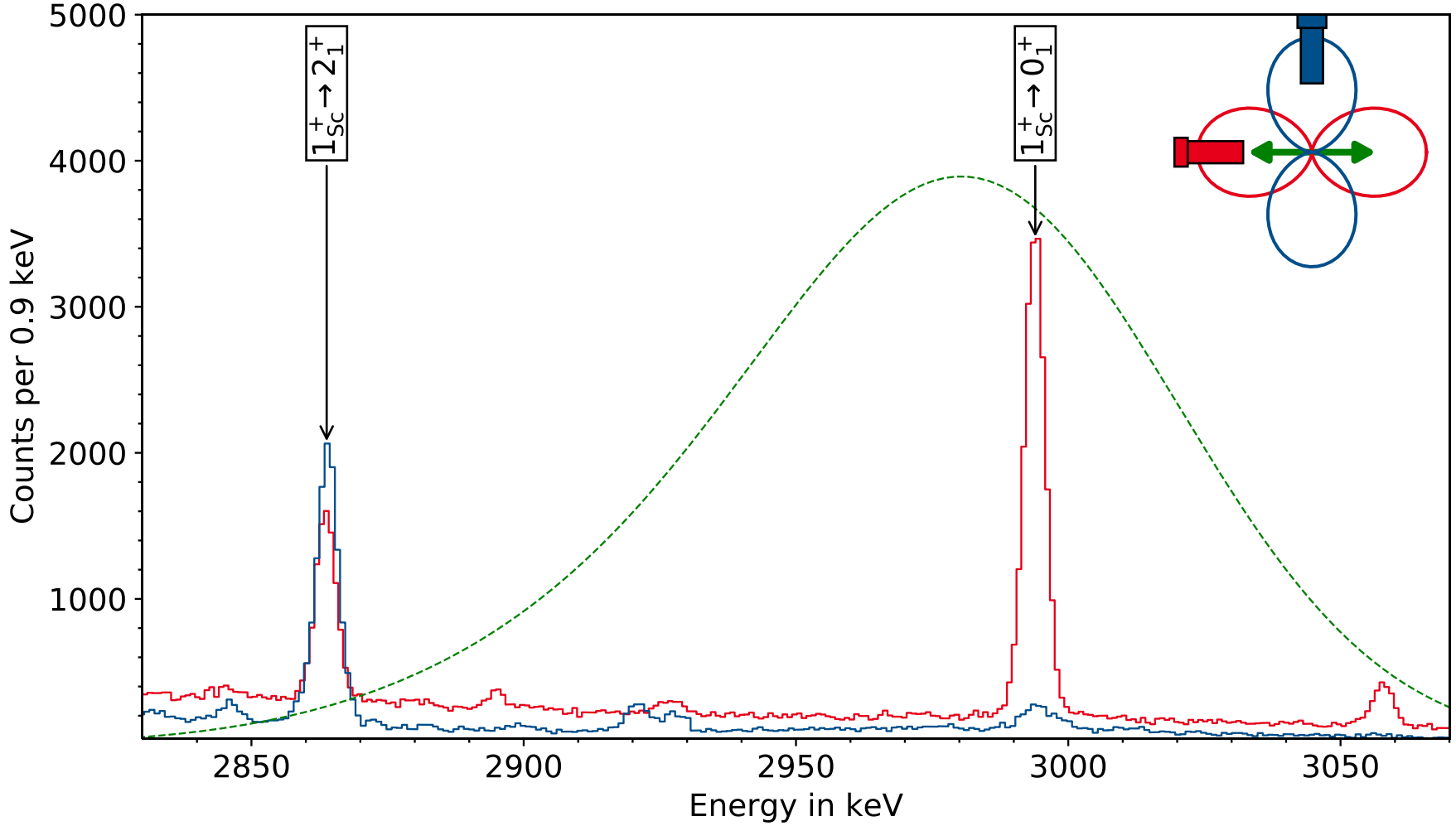

Extract of the ^{150}Nd spectra within the energy region of branching transitions

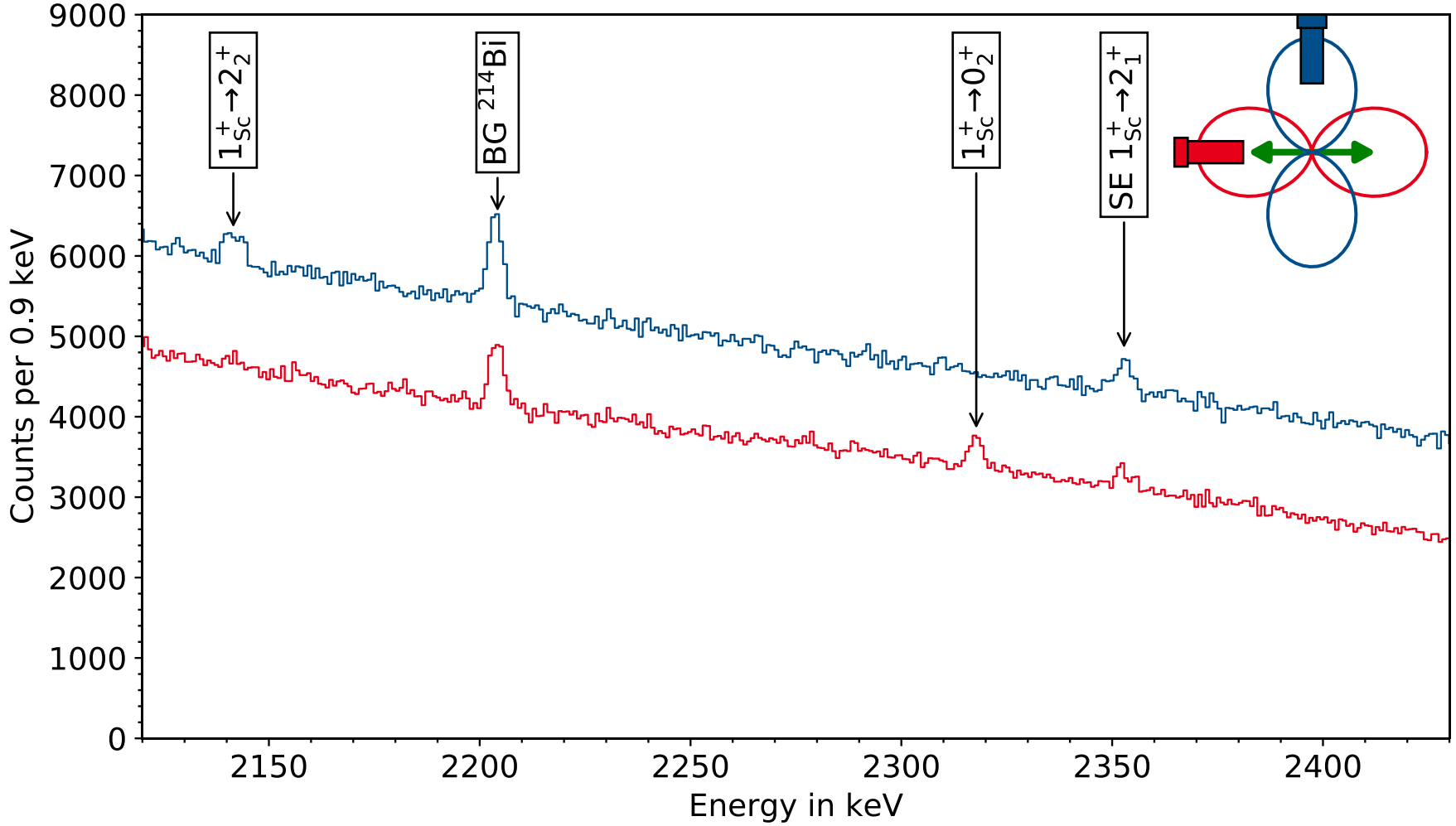

Results for ^{150}Nd

0νββ-decay mother ^{150}Nd:

$$\frac{\Gamma_{0_2^+}}{\Gamma_{0_1^+}} = 0.068(5)$$

$$B(M1\,;\ 1^+_{Sc} \rightarrow 0^+_1) = 0.24(3)\ \mu_N{}^2$$

$$B(M1\,;\ 1^+_{Sc} \rightarrow 0^+_2) = 0.035(5)\ \mu_N{}^2$$

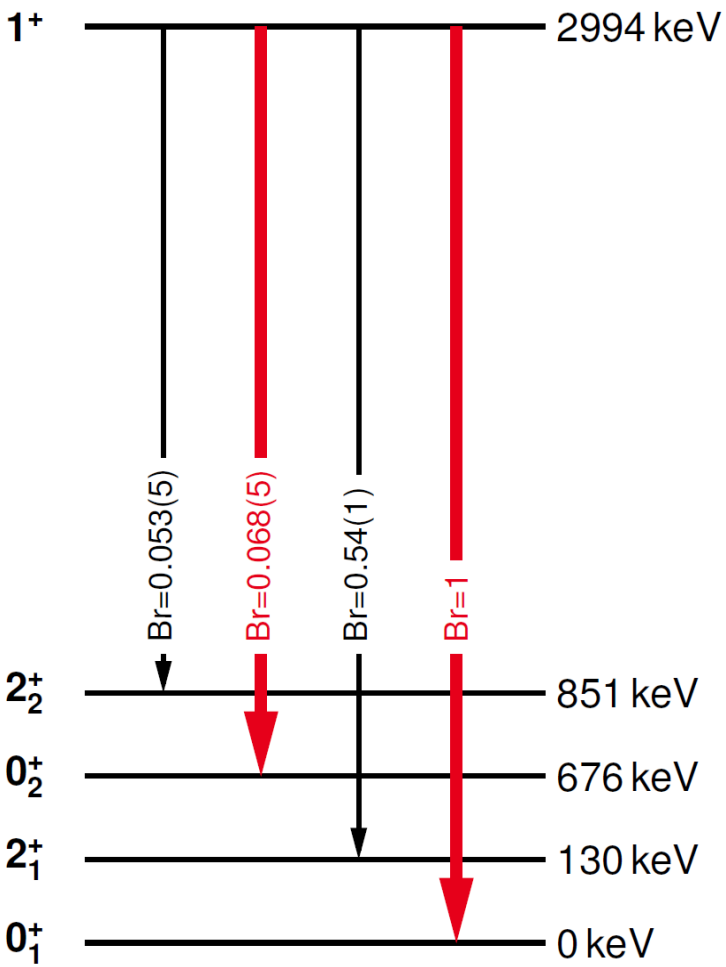

Results for ^{150}Nd and ^{150}Sm

TECHNISCHE UNIVERSITÄT DARMSTADT

0νββ-decay mother ^{150}Nd:

$$\frac{\Gamma_{0_2^+}}{\Gamma_{0_1^+}} = 0.068(5)$$

$$B(M1\,;\ 1^+_{Sc} \rightarrow 0^+_1) = 0.24(3)\ \mu_N{}^2$$

$$B(M1\,;\ 1^+_{Sc} \rightarrow 0^+_2) = 0.035(5)\ \mu_N{}^2$$

0νββ-decay daughter ^{150}Sm:

$$\frac{\Gamma_{0_2^+}}{\Gamma_{0_1^+}} = 0.19(5)$$

$$B(M1\,;\ 1^+_{Sc} \rightarrow 0^+_1) = 0.07(1)\ \mu_N{}^2$$

$$B(M1\,;\ 1^+_{Sc} \rightarrow 0^+_2) = 0.030(9)\ \mu_N{}^2$$

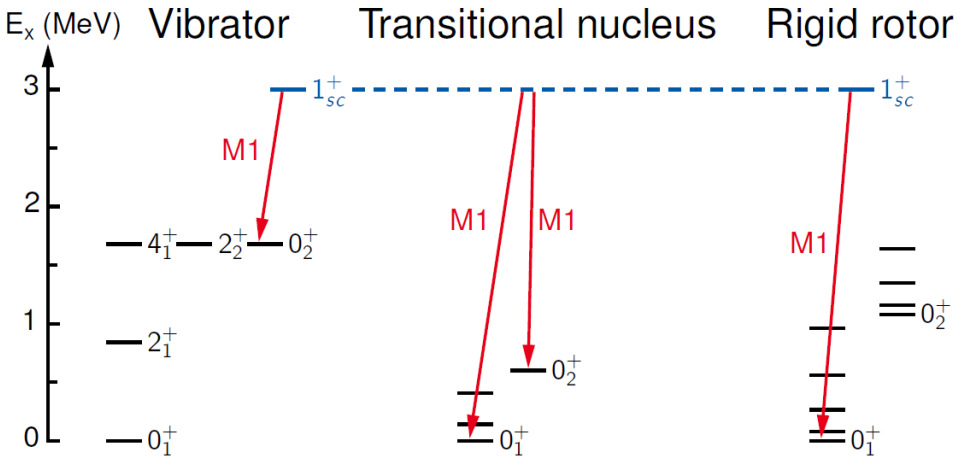

J. Beller, doctoral thesis, TU Darmstadt (2014)

Nuclear Photonics

SFB 1245

The Interacting Boson Model-2 (IBM-2)

- Algebraic nuclear structure model aimed at open shell nuclei
- Nuclei as system of interacting proton (π) and neutron (ν) bosons

  A. Arima *et al.*, Phys. Lett. B **66**, 205 (1977)
- Hamiltonian: $H = \epsilon\, \hat{n}_d + \kappa\, \hat{Q}_\pi^\chi \cdot \hat{Q}_\nu^\chi + \hat{M}_{\pi\nu}(\xi_1, \xi_2, \xi_3)$
  - $\hat{n}_d$ $\Longrightarrow$ Pairing interaction
  - $\hat{Q}_\pi^\chi \cdot \hat{Q}_\nu^\chi$ $\Longrightarrow$ Quadrupole interaction
  - $\hat{M}_{\pi\nu}(\xi_1, \xi_2, \xi_3)$ $\Longrightarrow$ Majorana interaction (ν-π symmetry energy)

$$\hat{M}_{\pi\nu}(\xi_1, \xi_2, \xi_3) = \xi_1 \hat{M}_{\pi\nu}^{(1)} + \xi_2 \hat{M}_{\pi\nu}^{(2)} + \xi_3 \hat{M}_{\pi\nu}^{(3)}$$

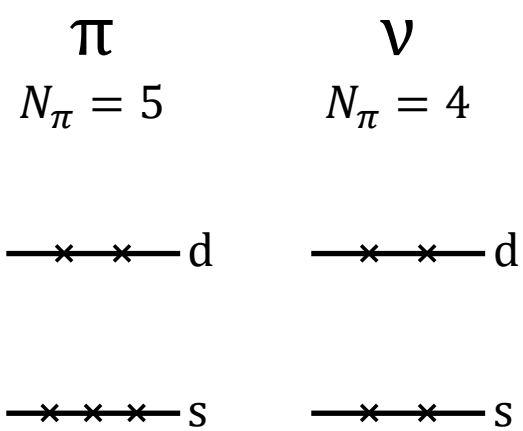

^{150}Nd in the IBM-2

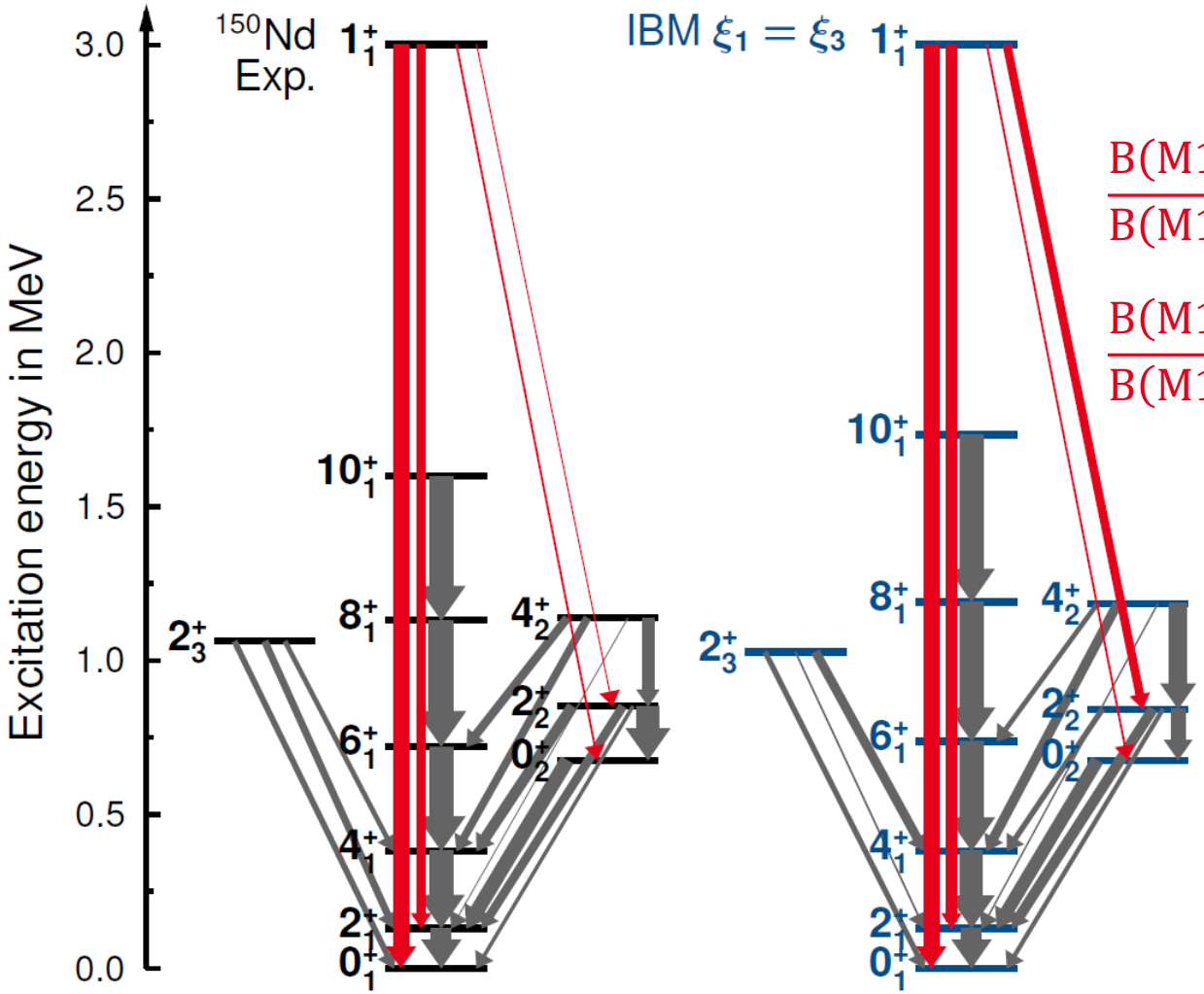

$$E(1_1^+) \Rightarrow \xi_1 + \xi_2 + \xi_3$$

$$\frac{B(M1; 1_1^+ \to 0_2^+)}{B(M1; 1_1^+ \to 0_1^+)} \Rightarrow \frac{\xi_2}{\xi_1 + \xi_3}$$

$$\frac{B(M1; 1_1^+ \to 2_2^+)}{B(M1; 1_1^+ \to 0_1^+)} \Rightarrow \frac{\xi_1}{\xi_3}$$

^{150}Nd in the IBM-2

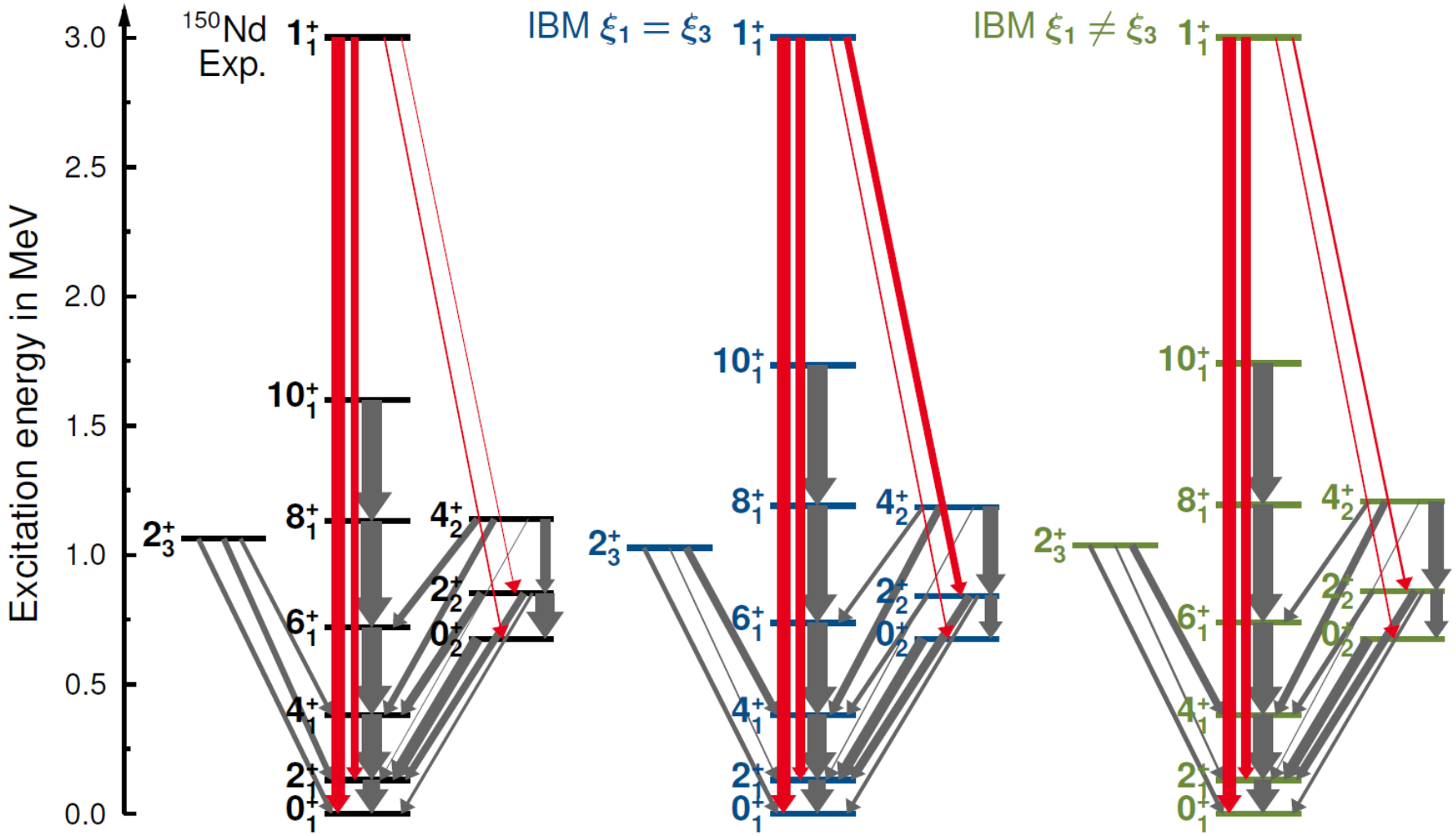

Updated IBM-2 0νββ-NME calculation

Constraints on IBM-2 Majorana parameters for ^{150}Nd and ^{150}Sm

→ Updated IBM-2 0νββ-NME calculation

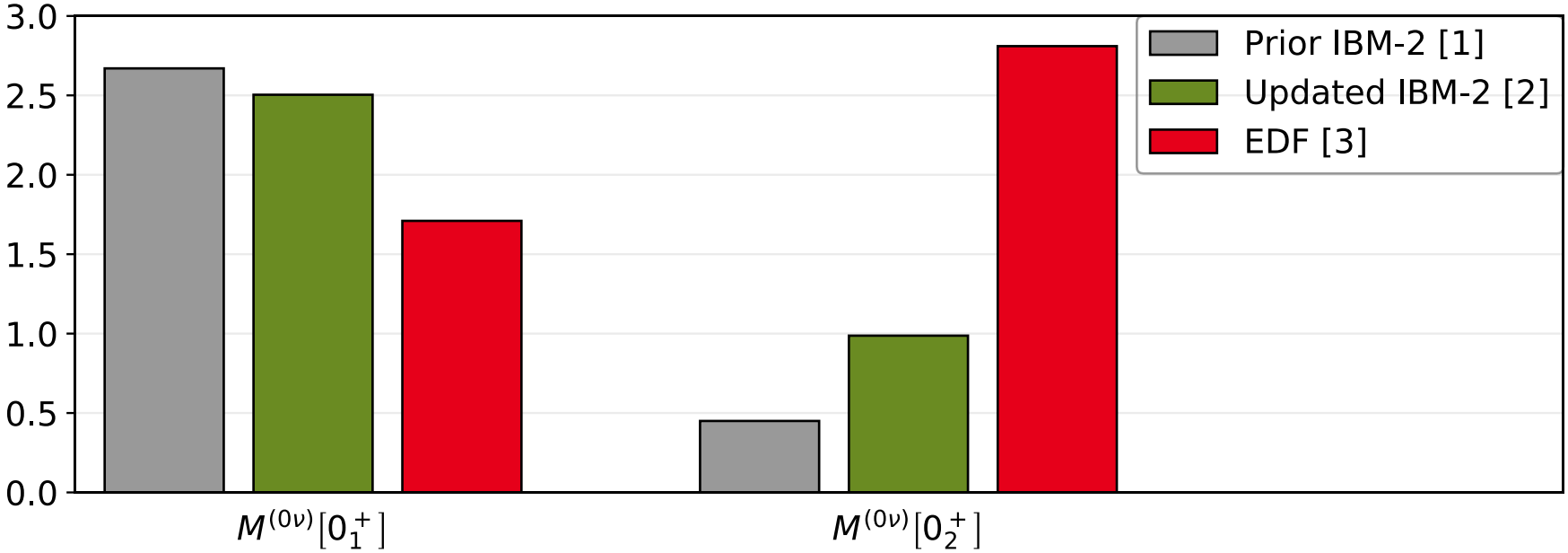

[1] J. Barea, J. Kotila, and F. Iachello, Phys. Rev. C **91**, 034304 (2015)
[2] J. Kotila, private communication (2019)
[3] J. Beller *et al.*, Phys. Rev. Lett. **111**, 172501 (2013)

Summary and outlook

Novel data on scissors mode in ^{150}Nd, ^{150}Sm, ^{82}Se and ^{82}Kr obtained

- ^{150}Nd, ^{150}Sm: Constraints on IBM-2 Majorana parameters

  → Updated IBM-2 0νββ-NME calculation

- ^{82}Se: Well described by shell model

  → Supports JUN45 effective interaction & 0νββ-NME calculation

  JUN45 effective interaction: M. Honma *et al.*, Phys. Rev. C **80**, 064323 (2009)

  0νββ-NME: R. A. Sen'kov, M. Horoi und B. A. Brown, Phys. Rev. C **89**, 054304 (2014)

  - ^{82}Kr shell model calculation still pending

→ More reliable extraction of neutrino mass from 0νββ-decay rate

Decay Characteristics of the Scissors Mode of 0νββ-Decay Partner Isotopes*

Conference on Neutrino and Nuclear Physics (CNNP2020)

J. Kleemann[1,✉], T. Beck[1], U. Friman-Gayer[1,2], N. Pietralla[1], V. Werner[1], S. Finch[2], J. Kotila[3], Krishichayan[2], B. Löher[1], H. Pai[1,4], O. Papst[1], W. Tornow[2], M. Weinert[5]

[1]IKP, TU Darmstadt, Germany
[2]TUNL, Duke University, Durham, NC, USA
[3]University of Jyväskylä, Finland
[4]SINP, Kolkata, India
[5]IKP, Universität zu Köln, Germany

✉E-Mail: jkleemann@ikp.tu-darmstadt.de

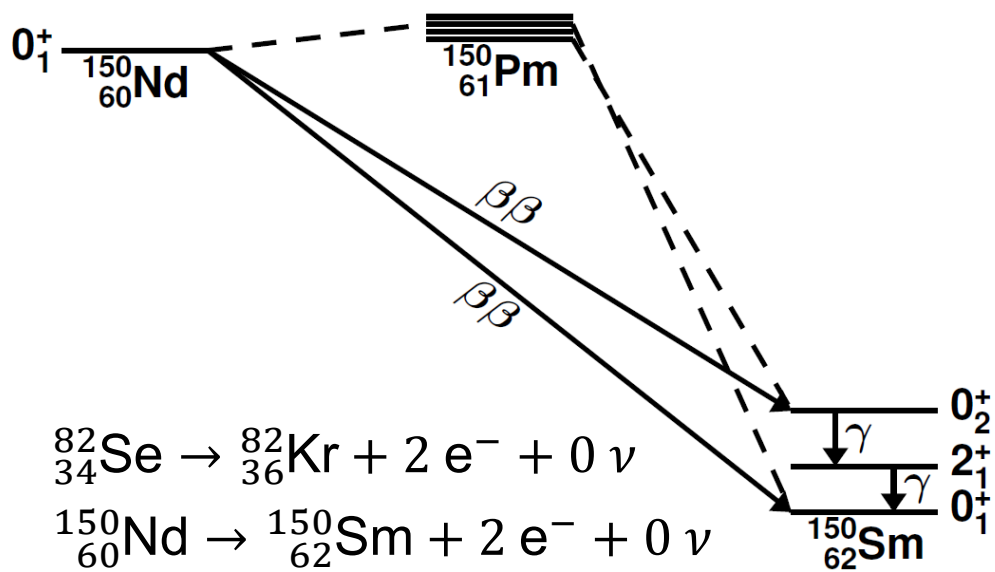

$$^{82}_{34}\mathrm{Se} \rightarrow {}^{82}_{36}\mathrm{Kr} + 2\,\mathrm{e}^- + 0\,\nu$$

$$^{150}_{60}\mathrm{Nd} \rightarrow {}^{150}_{62}\mathrm{Sm} + 2\,\mathrm{e}^- + 0\,\nu$$

*Supported by DFG research grant CRC 1245 and by the State of Hesse under the grant “Nuclear Photonics” within the LOEWE program